SIGN	DESCRIPTON	DATE	APPROVER

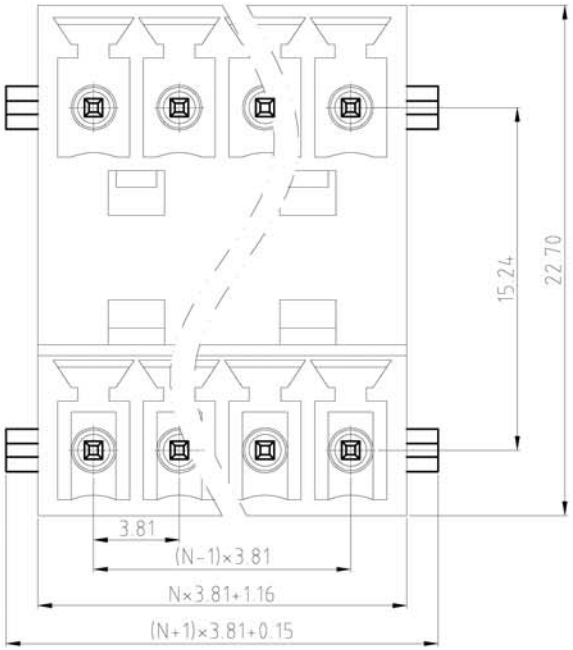

N=Number of contacts

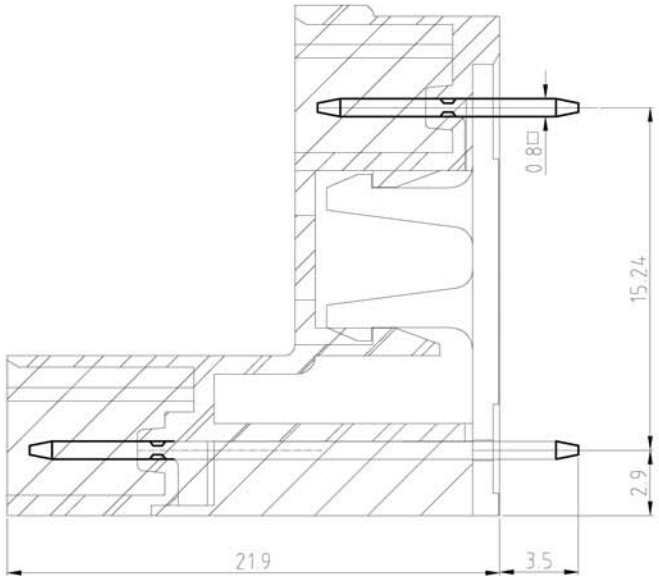

Technical Data:

Material:

Solder Pin: Copper Alloy Tin plated

Insulator body(housing): Polyamide (Glass filled)(UL94V-0)

Electrical

Voltage rating: 300VAC

Current rating: 12A

Withstanding Voltage: AC 2500V(1min)

Mechanical:

Using temperature Range: -40°C to +105°C

Soldering temperature:+250°C,5seconds Max.

Ordering Information:

F83-M-C XX-0 0 0 X 0

- XX: 02 To 24 — 2Pin To 24Pin
- 0: 0 180°, 1 90°
- 0: 0 Open, 1 Close, 2 Screw nut, 3 Square nut, 4 W/Latch holder
- X: 5 Green, 6 Blue, A Black

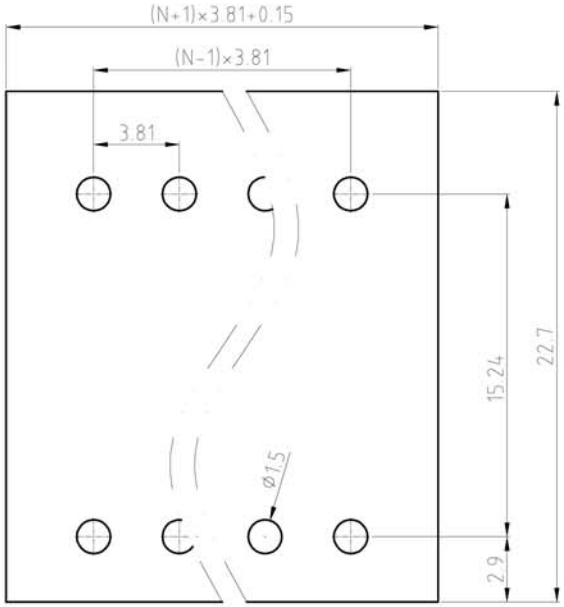

PCB. LAYOUT

WELINK 上海拓尔普电子科技有限公司 Welink International Co.,LTD.

TOLERANCE		APPROVED:		NAME:	F83-M Pitch 3.81mm -Series-180°(卡钩式)
X.	±0.50	CHECKED:			
X.X	±0.30	DRAWN: Ling Yu 2014,09,18			
X.XX	±0.20	UNITS: mm	REV: A	PART NO:	F83MCXX004X0
X°	±1°	SCALE: 4 / 1	PAGE: 1 / 1	DWG NO:	9F83MC041A