SIGN	DESCRIPTON	DATE	APPROVER

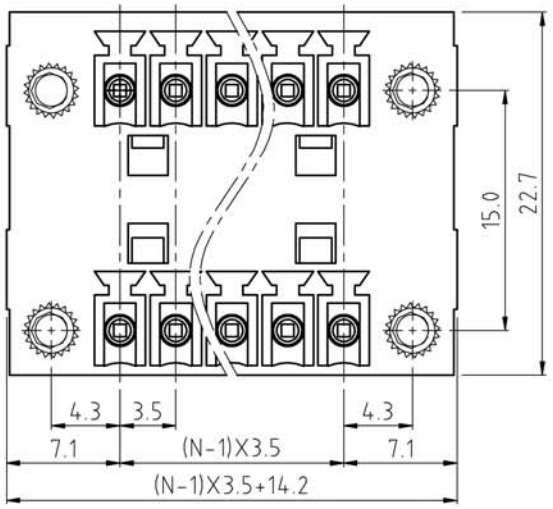

N=Number of contacts

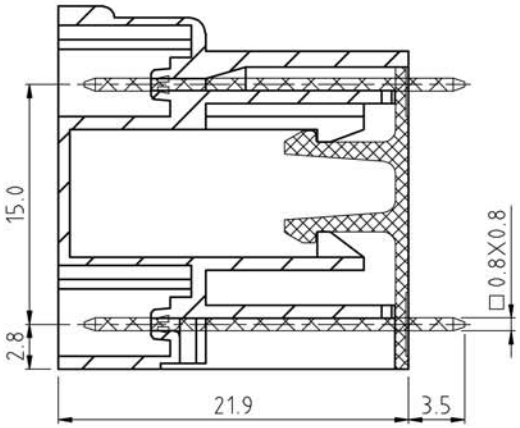

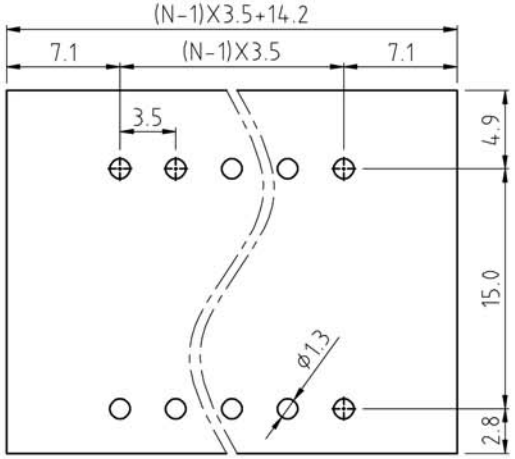

P.C.B. LAYOUT

Technical Data:

Material:

Solder Pin: Copper Alloy Tin plated

Metal nut:Copper Alloy

Insulator body(housing): Polyamide(Glass filled)(UL94V-0)

Electrical

Voltage rating: 300VAC

Current rating: 12Amps/way max

Withstanding Voltage: 2500VAC(1min) Test time=60sec/1pcs

Mechanical:

Operating temperature: -40°C to +105°C

Soldring reliability:

Test temperature= 250°C±10°C

5 seconds max

Ordering Information:

F83 - K - 3 XX - X 0 0 X 0

2 - 24, 02 - 24

5 Green
6 Blue
8 Grey
A Black

WELINK 上海拓尔普电子科技有限公司 Welink International Co.,LTD.

TOLERANCE X. ±0.50 X.X ±0.30 X.XX ±0.20 X° ±1°	APPROVED:		NAME: F83 - K pitch 3.5mm - series
	CHECKED:		
	DRAWN: Yang Ming 2011,09,26		
	UNITS: mm	REV: A	PART NO: F83K3XXX00X0
	SCALE: 3 / 1	PAGE: 1 / 1	DWG NO: 9F83K3001A